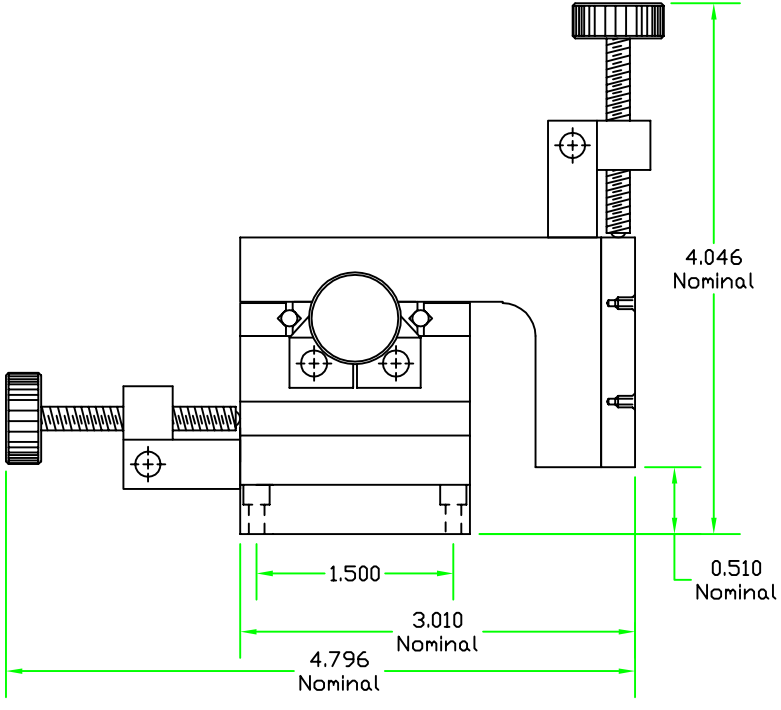
4.046
Nominal
0.510
Nominal
1.500
3.010
Nominal
4.796
Nominal

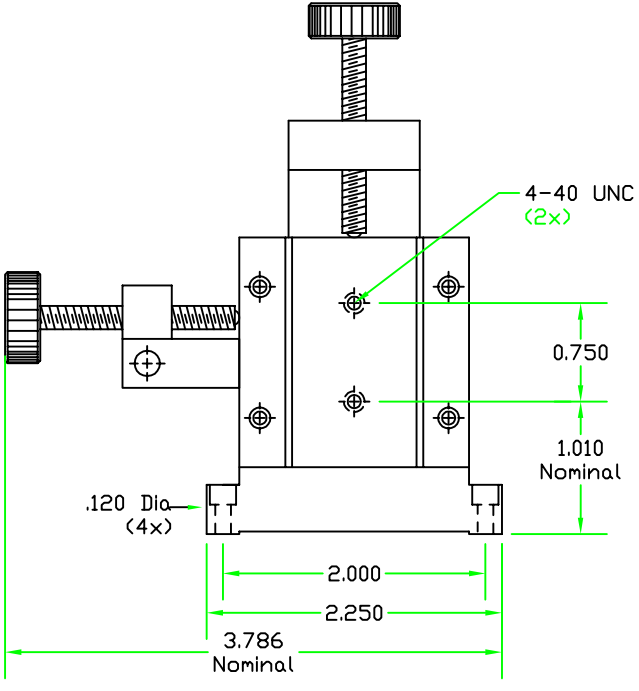
4-40 UNC
(2x)
0.750
1.010
Nominal
.120 Dia
(4x)
2.000
2.250
3.786
Nominal