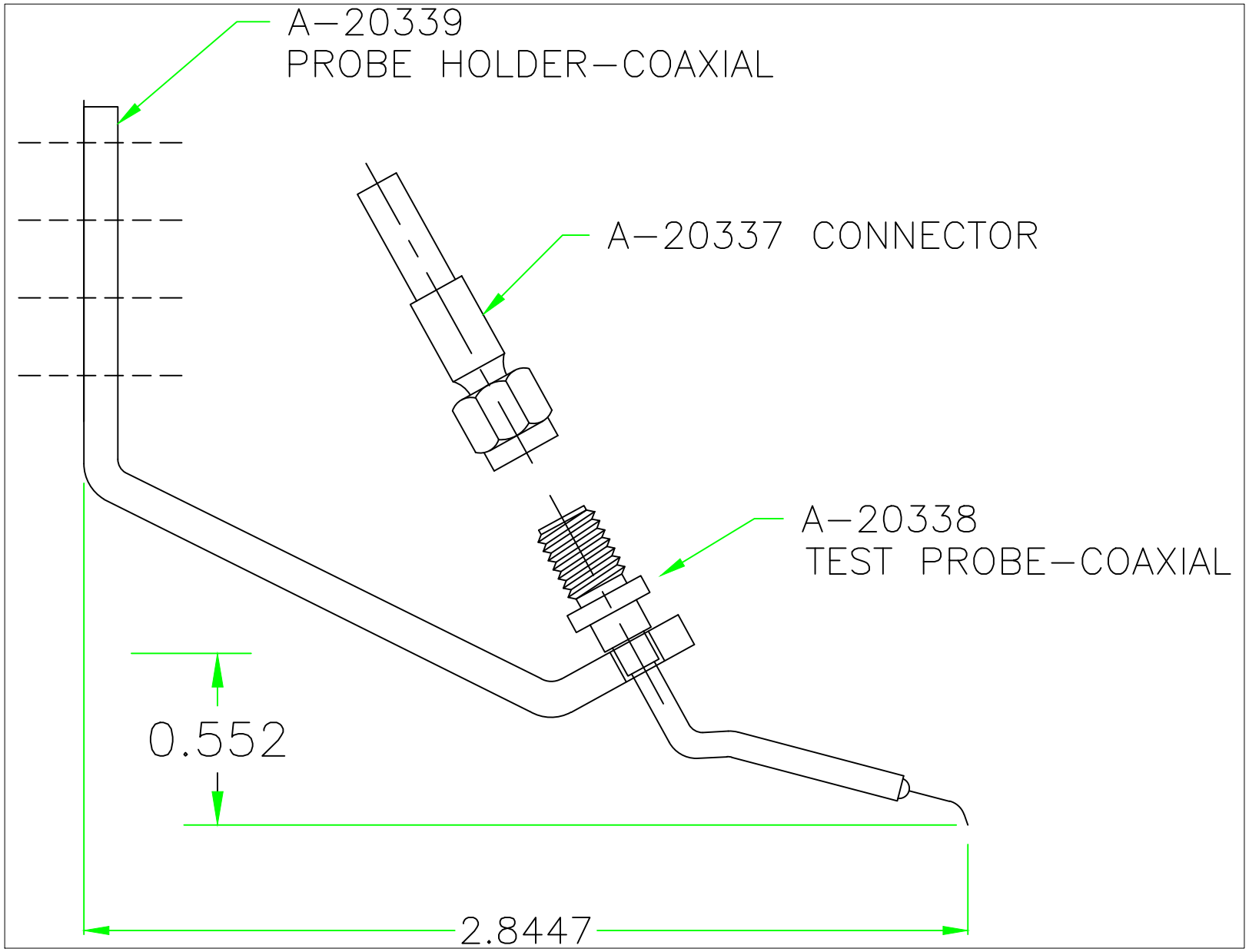
A-20339
PROBE HOLDER-COAXIAL
A-20337 CONNECTOR
A-20338
TEST PROBE-COAXIAL
0.552
2.8447